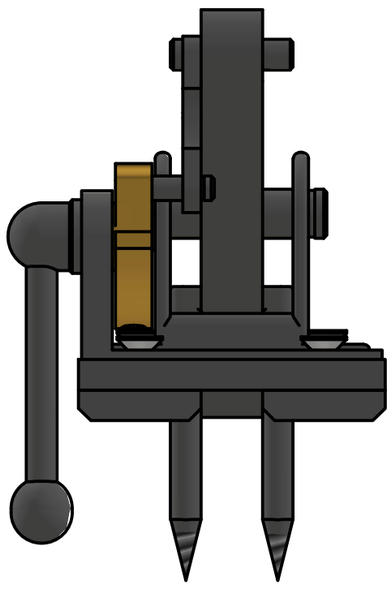

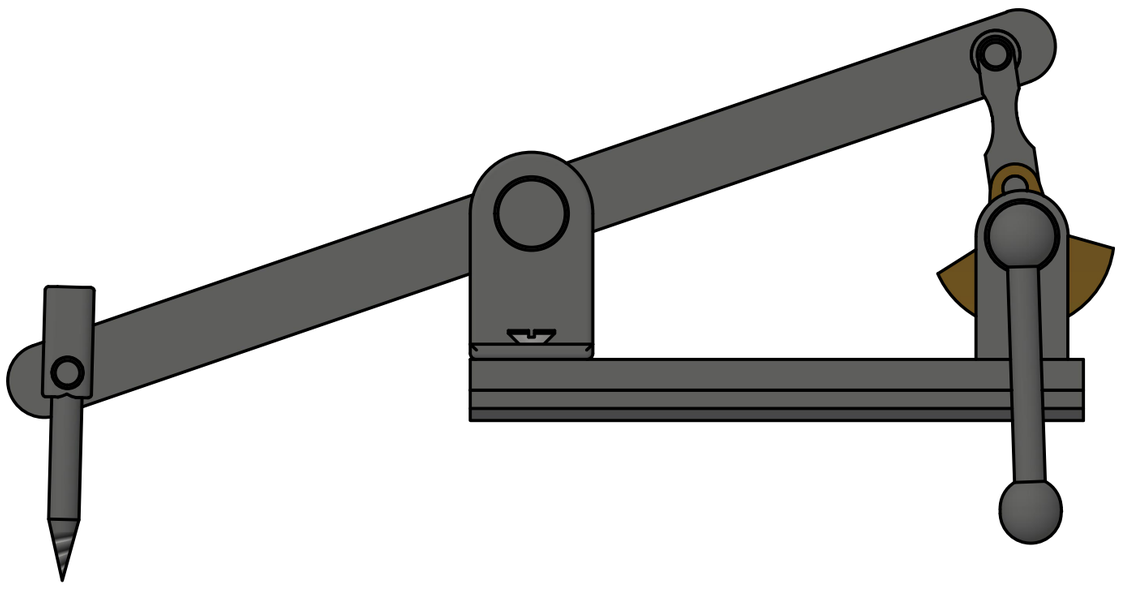

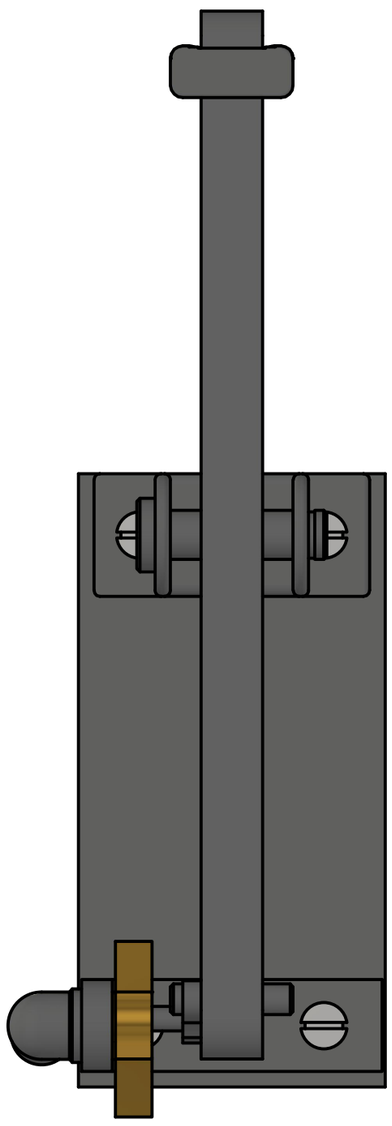

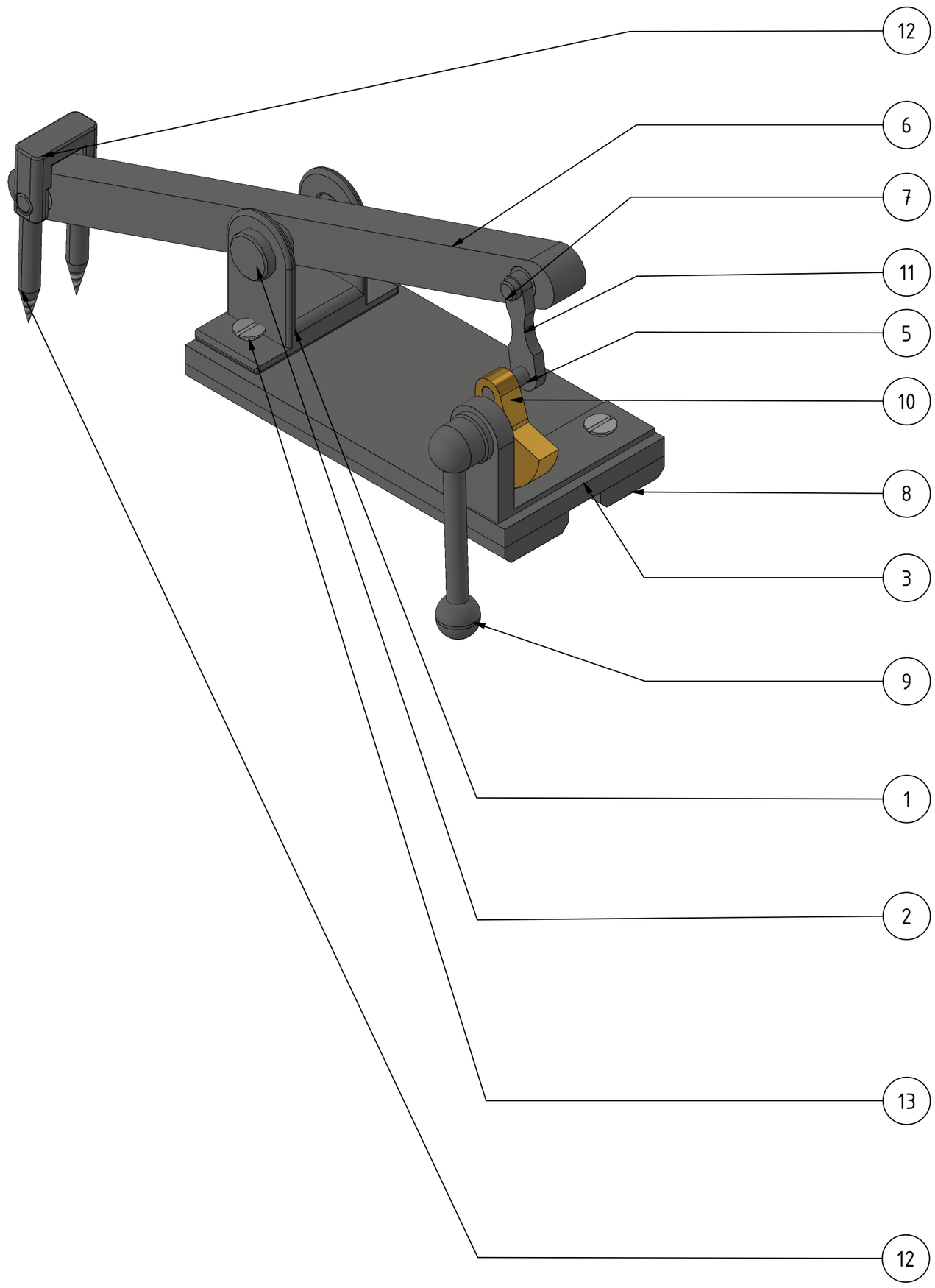

PARTS LIST		
ITEM	QTY	PART NUMBER
1	1	Bearing Block
2	1	Bolt
3	1	Groundplate
4	1	Half Bearing Block
5	1	KURBELZAPFEN NEW
6	1	Lever
7	2	Lock pin
8	2	Rail stand
9	1	short bolt
10	1	KURBEL PART 8
11	1	PLEUEL short new
12	1	Pin Marker
13	4	DIN 963 - M4 x 12

	Date	Name
Drawn	08-12-2021	Smit A
Checked		
Standard		

State | Changes | Date | Name

TAPPING TOOL MECHANISM

TAPPING MECHANISM-1

1

A2